# QSFP 40G 1270-1330nm Single mode Optical Transceiver

## Description

The BlueOptics© BO25K13610D QSFP transceiver is a high performance, cost effective module supporting a datarate up to 40Gbps with 10 Kilometer link length on single mode fiber.

BlueOptics© transceivers are 100% compliant with QSFP Multi-Source Agreement (MSA).

All BlueOptics© QSFP transceivers are always equipped with digital diagnostic function compliant to MSA SFF-8472.

Using digital diagnostic, BlueOptics© QSFP transceivers provide the following real time information:

- Supply voltage
- Laser bias current
- Laser average output power
- Laser received input power
- Temperature

The transceiver consists of five sections: A 4-channel DFB transmitter, a 4-channel PIN photodiode, a 4-channel trans-impedance preamplifier (TIA), the LD Driver and the digital diagnostic function.

## Applications

- ✓ 40G Ethernet
- ✓ Fibre Channel
- ✓ Infiniband QDR
- ✓ Data Center

## Features

- ✓ 40Gb/s serial optical interface compliant to 802.3ba 40GBASE-LR4
- ✓ 4 CWDM lanes Mux/Demux design
- ✓ DFB laser transmitter
- ✓ PIN photo-detector
- ✓ Hot-pluggable QSFP footprint compliant to SFF-8431
- ✓ Duplex LC/UPC type pluggable optical interface
- ✓ 2-wire interface for management
- ✓ Metal enclosure, for lower EMI
- ✓ RoHS compliant and lead-free
- ✓ Single +3.3V power supply
- ✓ Compliant with SFF-8472
- ✓ Case operating temperature
  - Commercial: 0°C to +70°C
  - Extended: -10°C to +80°C
  - Industrial: -40°C to +85°C

## Warnings

**Handling Precautions:** This device is susceptible to damage as a result of electrostatic discharge (ESD). A static free environment is highly recommended.

**Laser Safety:** Even small radiation emitted by laser devices can be dangerous to human eyes and lead to permanent eye injuries. Be sure to avoid eye contact with direct or indirect radiation.

## Warranty

Every BlueOptics© transceiver comes with a 5 year replacement warranty and lifetime support.
For a warranty inquiry, please contact your CBO sales representative.
This warranty only covers the first user of the equipment.

## Important Notice

Performance figures, data and any illustrative material provided in this data sheet are typical and must be specifically confirmed in writing by CBO before they become applicable to any particular order or contract. In accordance with the CBO policy of continuous improvement specifications may change without notice.

The publication of information in this data sheet does not imply freedom from patent or other protective rights of CBO or others.

Further details are available from any CBO sales representative.

## Installation

Before installation attach an ESD-preventive wrist to ensure not to damage the transceiver or hardware.

BlueOptics© BO25K13610D can be installed in any Small Form Factor Pluggable+ (QSFP) port. You can install the BO25K13610D regardless if the system is powered on or off, because it is hot-swappable.

Insert the transceiver into the SFP port and remove the dust cap.

You can now connect your cable.

## Order Information

| Part No. | Temp. | DDM |
|---|---|---|
| BO25K13610D | 0°C to +70°C | ✓ |
| BO25K13610DEX | -10°C to +80°C | ✓ |
| BO25K13610DIN | -40°C to +80°C | ✓ |

## Regulatory Compliance

| Feature | Standard | Co. |
|---|---|---|
| Electrostatic Discharge (ESD) | - IEC/EN 61000-4- 2 | ✓ |
| Electromagnetic Interference (EMI) | - FCC Part 15 Class B EN 55022<br>- Class B (CISPR 22A) | ✓ |
| Laser Eye Safety | - FDA 21CFR 1040.10, 1040.11<br>- IEC/EN 60825-1, 2 | Class 1<br>✓ |
| Component Recognition | - IEC/EN 60950, UL | ✓ |
| RoHS | - 2002/95/EC | ✓ |
| EMC | - EN61000-3 | ✓ |

## 1. Absolute Maximum Ratings

| Parameter | Symbol | Min. | Typ. | Max. | Unit |
|---|---|---|---|---|---|
| Storage Temperature | Ts | -40 | | 85 | ºC |
| Storage Ambient Humidity | HA | 5 | | 95 | % |

## 2. Recommended Operating Conditions

| Parameter | Symbol | Min. | Typ. | Max. | Unit | Note |
|---|---|---|---|---|---|---|
| | | 0 | | 70 | | BO25K13610D |
| | | -10 | | 80 | ºC | BO25K13610DEX |
| | | -40 | | 85 | | BO25K13610DIN |
| Ambient Humidity | HA | 5 | | 70 | % | |
| Transmission Distance | | | | 10 | KM | |
| Coupled Fiber | Single mode fiber | | | | | 9/125µm SMF |

## 3. Electrical Interface Characteristics

| Parameter | Symbol | Min. | Typ. | Max. | Unit | Note |
|---|---|---|---|---|---|---|
| Power Supply Voltage | Vcc | 3.14 | 3.3 | 3.46 | V | |
| Signal Input Voltage | Icc | | | 900 | mA | |
| **Transmitter** | | | | | | |
| Input differential impedance | Rin | | 100 | | Ω | 1 |
| Single ended data input swing | Vin,pp | 180 | | 1000 | mV | |
| Transmit Disable Voltage | VD | Vcc-1.3 | | Vcc | V | |
| Transmit Enable Voltage | VEN | Vee | | Vee+0.8 | V | 2 |
| Transmit Disable Assert Time | | | | 10 | µs | |
| **Receiver** | | | | | | |
| Differential data output swing | Vout,pp | 300 | | 850 | mV | 3 |
| Data output rise time | tr | 28 | | | Ps | 4 |
| Data output fall time | tf | 28 | | | Ps | 4 |
| LOS Fault | VLOS fault | Vcc-1.3 | | VccHOST | V | 5 |
| LOS Normal | VLOS norm | Vee | | Vee+0.8 | V | 5 |
| Power Supply Rejection | PSR | 100 | | | mVpp | 6 |

**Notes:**

1. Internally AC coupled.
2. Or open circuit.
3. Into 100Ω differential termination.
4. 20-80%
5. LOS is an open collector output. Should be pulled up with 4.7KΩ on the host board.
6. All transceiver specifications are compliant with a power supply sinusoidal modulation of 20 Hz to 1.5 MHz up to specified value through the power supply filtering network shown on page 23 of the Small Form - factor Pluggable (SFP) Transceiver Multi Source Agreement (MSA), September 14, 2000.

## 4. Transmitter Specifications - Optical

| Parameter | Symbol | Min. | Typ. | Max. | Unit | Note |
|---|---|---|---|---|---|---|
| Total Output Power | $P_{OUT}$ | | | 8.3 | dBm | |
| Average Output Power per Lane | $P_{OUTPL}$ | -7 | | 2.3 | dBm | |
| Average launch Power off per lane | $P_{OFF}$ | | | -30 | dBm | |
| Extinction Ratio | ER | 3.5 | | | dB | |
| | λ0 | 1264.5 | 1271 | 1277.5 | | |
| | λ1 | 1284.5 | 1291 | 1297.5 | | |
| | λ2 | 1304.5 | 1311 | 1317.5 | | |
| | λ3 | 1324.5 | 1331 | 1337.5 | | |
| Transmitter and Dispersion Peanlty | TDP | | | 2.3 | dB | |
| Spectral Width (-20dB) | σ | | | 1 | nm | |
| | SMSR | 30 | | | dB | |
| RIN | RIN | | | -128 | dB/Hz | |
| Transmitter Jitter (peak to peak) | Compliant with IEEE 802.3ba | | | | | |

## 5. Receiver Specifications - Optical

| Parameter | Symbol | Min. | Typ. | Max. | Unit | Note |
|---|---|---|---|---|---|---|
| Receiver Sensitivity per Lane | $P_{IN}$ | | | -11.5 | dBM | 1 |
| Input Saturation Power (Overload) | $P_{SAT}$ | 3.3 | | | dBm | |
| Receiver Reflectance | $P_R$ | | | -26 | dBm | |

**Notes:**

1. Measured with PRBS=$2^{31}$-1 non-return-to-zero.

## 6. QSFP to Host Connector Pin Out

| Pin | Symbol | Name / Description | Note |
|---|---|---|---|
| 1 | GND | Transmitter Ground (Common with Receiver Ground) | 1 |
| 2 | Tx2n | Transmitter Inverted Data Input | |
| 3 | Tx2p | Transmitter Non-Inverted Data output | |
| 4 | GND | Transmitter Ground (Common with Receiver Ground) | 1 |
| 5 | Tx4n | Transmitter Inverted Data Input | |
| 6 | Tx4p | Transmitter Non-Inverted Data output | |
| 7 | GND | Transmitter Ground (Common with Receiver Ground) | 1 |
| 8 | ModSelL | Module Select | |
| 9 | ResetL | Module Reset | |
| 10 | VccRx | 3.3V Power Supply Receiver | 2 |
| 11 | SCL | 2-Wire serial Interface Clock | |
| 12 | SDA | 2-Wire serial Interface Data | |
| 13 | GND | Transmitter Ground (Common with Receiver Ground) | |
| 14 | Rx3p | Receiver Non-Inverted Data Output | |
| 15 | Rx3n | Receiver Inverted Data Output | |
| 16 | GND | Transmitter Ground (Common with Receiver Ground) | 1 |
| 17 | Rx1p | Receiver Non-Inverted Data Output | |
| 18 | Rx1n | Receiver Inverted Data Output | |
| 19 | GND | Transmitter Ground (Common with Receiver Ground) | 1 |
| 20 | GND | Transmitter Ground (Common with Receiver Ground) | 1 |
| 21 | Rx2n | Receiver Inverted Data Output | |
| 22 | Rx2p | Receiver Non-Inverted Data Output | |
| 23 | GND | Transmitter Ground (Common with Receiver Ground) | 1 |
| 24 | Rx4n | Receiver Inverted Data Output | 1 |

| | | | |
|---|---|---|---|
| 25 | Rx4p | Receiver Non-Inverted Data Output | |
| 26 | GND | Transmitter Ground (Common with Receiver Ground) | 1 |
| 27 | ModPrsl | Module Present | |
| 28 | IntL | Interrupt | |
| 29 | VccTx | 3.3V power supply transmitter | 2 |
| 30 | Vcc1 | 3.3V power supply | 2 |
| 31 | LPMode | Low Power Mode | |
| 32 | GND | Transmitter Ground (Common with Receiver Ground) | 1 |
| 33 | Tx3p | Transmitter Non-Inverted Data Input | |
| 34 | Tx3n | Transmitter Inverted Data Output | |
| 35 | GND | Transmitter Ground (Common with Receiver Ground) | 1 |
| 36 | Tx1p | Transmitter Non-Inverted Data Input | |
| 37 | Tx1n | Transmitter Inverted Data Output | |
| 38 | GND | Transmitter Ground (Common with Receiver Ground) | 1 |

**Notes:**

1. GND is the symbol for signal and supply (power) common for QSFP modules. All are common within the QSFP module and all module voltages are referenced to this potential unless otherwise noted. Connect these directly to the host board signal common ground plane.
2. VccRx, Vcc1 and VccTx are the receiving and transmission power suppliers and shall be applied concurrently. Recommended host board power supply filtering is shown below. Vcc Rx, Vcc1 and Vcc Tx may be internally connected within the QSFP transceiver module in any combination. The connector pins are each rated for a maximum current of 500mA.

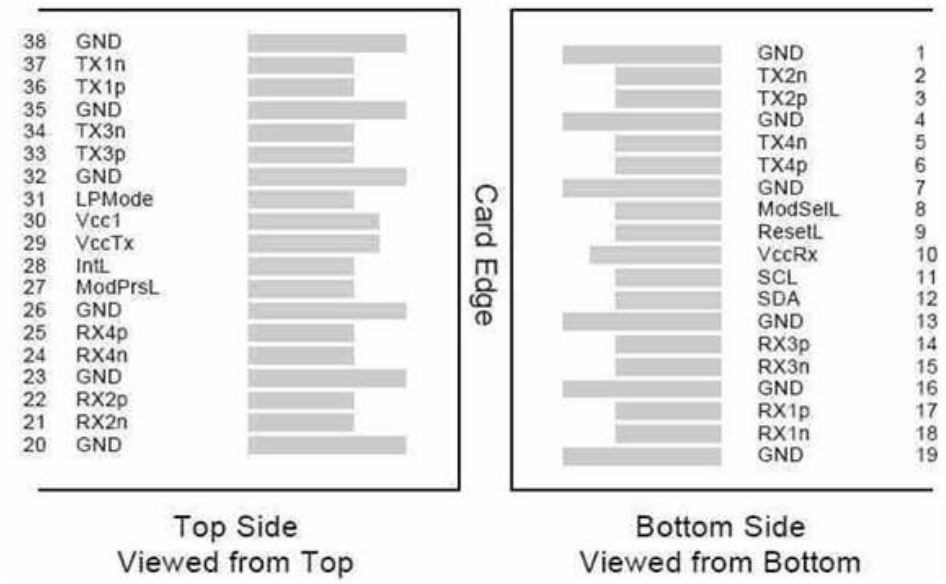


**Pinout of Connector Block on Host Board**

## 7. EEPROM Information

The SFP MSA defines a 256-byte memory map in EEPROM describing the transceivers capabilities, standard interfaces, manufacturer, and other information, which–h is accessible over a 2 wire serial interface at the 8-bit address 1010000X (A0h).

| Data Address | Field Size (Bytes) | Name of Field | Description |
|---|---|---|---|
| 128 | 1 | Identifier | Formfactor |
| 129 | 1 | Ext. Identifier | |
| 130 | 1 | Connector | |
| 131-138 | 8 | Transceiver | Transmittter Code |
| 139 | 1 | Encoding | |
| 140 | 1 | BR, Nominal | Transceiver Speed |
| 141 | 1 | Extended RateSelect Compliance | Tags for Extended RateSelect compliance |
| 142 | 1 | Length (9µm) km | Max. link length in KM |
| 143 | 1 | Length (9µm) 100m | Max. link length in M |
| 144 | 1 | Length (50µm) 10m | Max. link length in M |
| 145 | 1 | Length(62.5µm)10m | Max. link length in M |
| 146 | 1 | Length (Copper) | Max. link length in M |
| 147 | 1 | Device Tech | Device technology |
| 148-163 | 16 | Vendor name | Vendor name - OEM |
| 164 | 1 | Extended Transceiver | Extended Transceiver Codes for InfiniBand |
| 165-167 | 3 | Vendor OUI | |
| 168-183 | 16 | Vendor PN | Product Number - depending on Part |
| 184-185 | 2 | Vendor rev | Vendor revision |
| 186-187 | 2 | Wavelength | Transceiver Wavelength |
| 188-189 | 2 | Wavelength tolerance | Guaranteed range of laser wavelength (+/- value) from Nominal wavelength (Wavelength Tol. = value/200 in nm) |
| 190 | 1 | Max Case Temp | Maximum Case Temperature in Degrees C |
| 191 | 1 | CC_BASE | Check code for Base ID Fields (addresses 128-190) |
| 192-195 | 4 | Options | Rate Select, TX Disable, TX Fault, LOS |
| 196-211 | 16 | Vendor SN | Part serial number |
| 212-219 | 8 | Vendor date code | Year, Month, Day |
| 220 | 1 | Diagnostic type | Diagnostics |
| 221 | 1 | Enhanced option | Indicates which optional enhanced features are implemented in the transceiver. |
| 222 | 1 | Reserved | Reserved |
| 223 | 1 | CC_EXT | Check code for the Extended ID Fields (addresses 192-222) |
| 224-255 | 32 | Vendor Specific | Vendor Specific EEPROM |

## 8. Digital Diagnostics / Digital Optical Monitoring

The transceiver provides serial ID memory contents and diagnostic information about the present operating conditions by the 2-wire serial interface (SCL, SDA).

The diagnostic information with internal calibration or external calibration are all implemented, including received power monitoring, transmitted power monitoring, bias current monitoring, supply voltage monitoring and temperature monitoring.

## 9. Recommended Interface Circuit

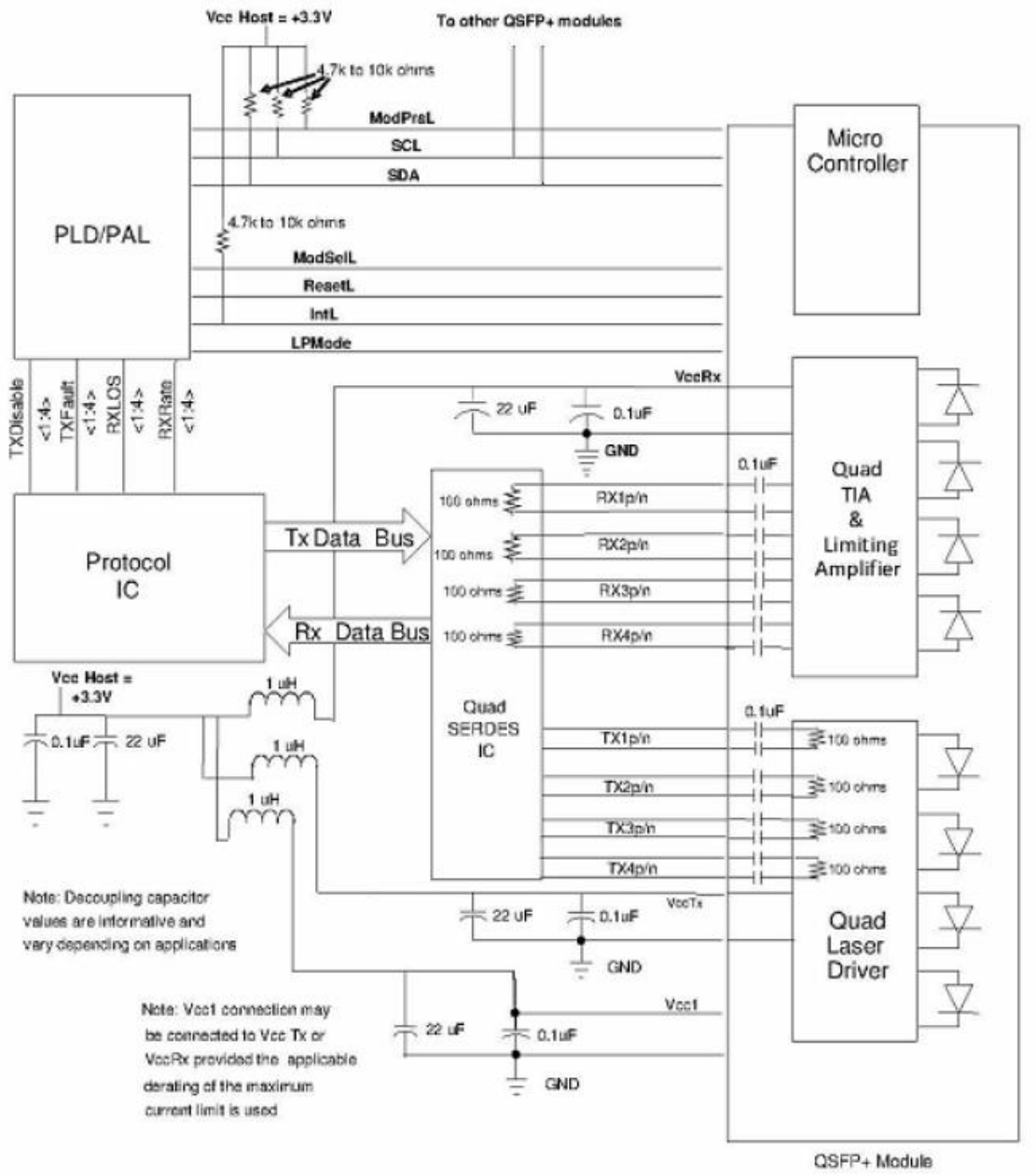
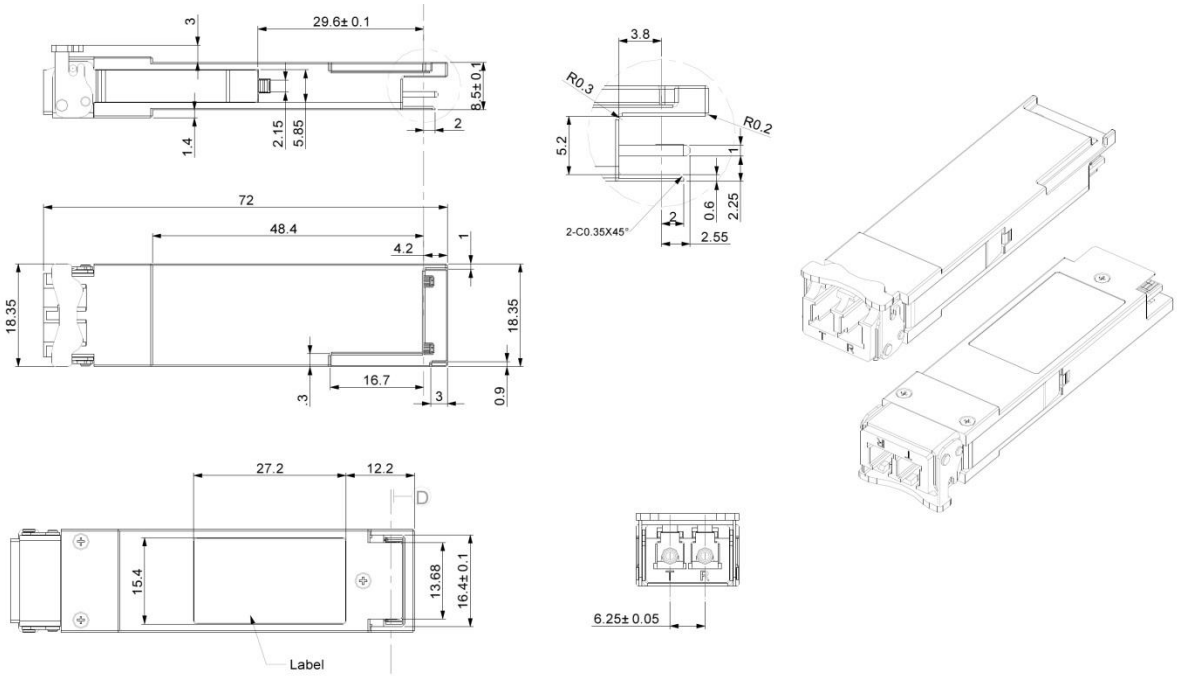
## 10. Mechanical Specifications (Unit: mm)